Conductance fluctuations of open quantum dots under microwave radiation

Maxim G. Vavilov[1] and Igor L. Aleiner[2]
[1] *Laboratory of Atomic and Solid State Physics, Cornell University, Ithaca, New York 14853*
[2] *Department of Physics and Astronomy, SUNY at Stony Brook, Stony Brook, New York 11794*
(Received 2 March 2001; published 8 August 2001)

We develop a time-dependent random-matrix theory describing the influence of a time-dependent perturbation on mesoscopic conductance fluctuations in open quantum dots. The effect of external field is taken into account to all orders of perturbation theory, and our results are applicable to both weak and strong fields. We obtain temperature and magnetic field dependences of conductance fluctuations. The amplitude of conductance fluctuations is determined by electron temperature in the leads rather than by the width of electron-distribution function in the dot. The asymmetry of conductance with respect to inversion of applied magnetic field is the main feature allowing to distinguish the effect of direct suppression of quantum interference from the simple heating if the frequency of external radiation is larger than the temperature of the leads $\hbar\omega \gg T$.

DOI: 10.1103/PhysRevB.64.085115 PACS number(s): 72.15.Rn, 73.23.Ad, 72.70.+m

INTRODUCTION

Transport coefficients of disordered and chaotic electron systems fluctuate from sample to sample.[1–7] These fluctuations are commonly called mesoscopic fluctuations. Mesoscopic fluctuations of conductance of noninteracting systems are universal. The universality means that the variance of the conductance $\langle \delta g^2 \rangle$ is of the order G_0^2, where $G_0 = e^2/\pi\hbar$ is the quantum of conductance and is weakly dependent on the sample geometry, see Refs. 4 and 5.

The fluctuations of transport properties of electron systems is a quantum-mechanical phenomenon based on the interference of quantum states. As any other interference phenomena, conductance fluctuations are very sensitive to inelastic processes, commonly referred to as dephasing.[8] The dephasing processes in open quantum dots were considered on purely phenomenological basis.[9] First microscopic consideration of the microwave radiation on the weak localization in quantum dots was performed in Ref. 10. In this reference, the concept of the time-dependent random-matrix theory was used.

The purpose of the present paper is to extend the results of Ref. 10 to describe the effect of the external microwave radiation on the mesoscopic fluctuations of the conductance. The ultimate goal is to identify observable features that allow one to distinguish the effect of the external field to the dot from simple heating.[7]

However, there is a significant difference in the calculation of the mesoscopic conductance fluctuations and the averaged conductance.[10] Because, the dot is subjected to the external classical radiation that produces nonequilibrium in the dot, the dc current I_0 through the dot is finite (though randomly changing from one configuration to another) even if the dc voltage $V = V_l - V_r$ across the dot is zero, see Fig. 1. This current I_0 is due either to the photovoltaic effect[11,12] or to rectification of ac bias across the dot, see Refs. 13 and 14. We are interested in the linear response to the applied dc voltage across the dot,

$$I_{\rm dc} = I_0 + gV + O(V^2). \tag{1}$$

In principal, the linear in V contribution to the current comes from two sources: (i) the nonequilibrium of the distribution functions in the leads, (ii) change in the photovoltaic current, correspondent to a different realization of the dot due to the finite bias. Nevertheless, we will show that due to the electroneutrality condition the nonequilibrium current prevails.[15]

Closing the introductory part, we note that the present paper has a certain overlap with the recent preprint by Wang and Kravtsov,[16] where the conductance fluctuations were calculated for open quantum dots subjected to a periodic ac pumping. Our treatment is different in several aspects. Firstly, our results are applicable for the frequencies of the external radiation ω smaller than the Thouless energy of the dot E_T, whereas treatment of Ref. 16 is valid in the opposite regime. Secondly, unlike Ref. 16, we will restrict ourselves to the case of the monochromatic radiation acting on the dot. Finally, we will highlight the role of the electroneutrality requirement in a separability of the photovoltaic effect and the mesoscopic conductance fluctuations, which was not done in Ref. 16.

MODEL

We apply the random matrix theory (RMT) to study the conductance of open quantum dots, see Ref. 4. All correc-

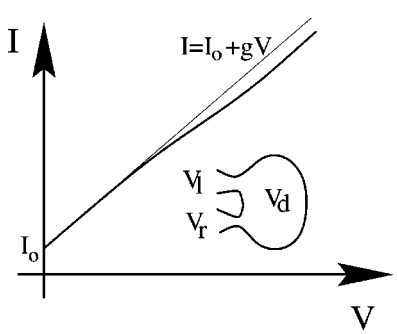

FIG. 1. An open quantum dot is connected to two leads with applied voltages $V_{l,r}$. The measured current through the dot has an offset I_0 at zero bias and the linear response to small applied voltage $V = V_l - V_r$.

tions to the RMT are governed by a small parameter $N_{\rm ch}/g_{\rm dot}$, where $g_{\rm dot}=E_{\rm T}/\delta_1$ and δ_1 is the mean level spacing, see Ref. 17 for the detailed discussion. We consider the conductance fluctuations of quantum dots with a large number of open channels $N_{\rm ch}\gg 1$. In this approximation, we neglect the effects of the electron-electron interaction on the conductance that are as small as $1/N_{\rm ch}^2$,[17,18] while the conductance fluctuations are proportional to $1/N_{\rm ch}$. The same condition also allows us to use a conventional diagrammatic technique[19] to take the ensemble average. External microwave radiation is modeled as a time-dependent random part of the Hamiltonian of the dot.

The Hamiltonian of the system is[17]

$$\mathcal{H}(t)=\mathcal{H}_{\rm D}(t)+\mathcal{H}_{\rm L}+\mathcal{H}_{\rm LD}, \tag{2}$$

where $\mathcal{H}_{\rm D}$ is the Hamiltonian of the electrons in the dot, which is determined by the $M\times M$ matrix H_{nm},

$$\mathcal{H}_{\rm D}(t)=\sum_{n,m=1}^{M}\psi_n^\dagger H_{{\rm D}nm}(t)\psi_m+E_c n^2, \tag{3}$$

ψ_n corresponds to the states of the dot and the thermodynamic limit $M\to\infty$ is assumed, E_c is the charging energy, and $n=\Sigma_{m=1}^{M}\psi_m^\dagger\psi_m$, the last term in Eq. (3) is the largest contribution to the interaction effects in quantum dot, see Ref. 17 for the discussion of the status of this approximation. Matrix $\hat{H}_{\rm D}(t)$ is given by

$$\hat{H}_{\rm D}(t)=\hat{H}+\hat{V}\varphi(t). \tag{4}$$

Here the time-independent part of the Hamiltonian $\hat{H}$ is a random realization of a $M\times M$ matrix, which obeys the correlation function

$$\langle H_{nm}(\Phi_1)H^*_{n'm'}(\Phi_2)\rangle=M\left(\frac{\delta_1}{\pi}\right)^2\left[\left(1-\frac{N_{\rm d}}{4M}\right)\delta_{nn'}\delta_{mm'}+\left(1-\frac{N_{\rm c}}{4M}\right)\delta_{mn'}\delta_{nm'}\right], \tag{5}$$

where δ_1 is the mean level spacing of the dot and parameters $N_{\rm d,c}$ describe the effect of the magnetic field on the dot.[17] These parameters can be estimated as $N_{\rm d,c}\simeq g_{\rm dot}(\Phi_1\mp\Phi_2)^2/\Phi_0^2$, where $\Phi_{1,2}$ is the magnetic flux through the dot and $\Phi_0=hc/e$ is the flux quantum. The time-dependent perturbation is described by symmetric $M\times M$ matrices V_{nm} and function $\varphi(t)$ of time t. We assume that the perturbation is harmonic with single frequency ω, $\varphi(t)=\cos\omega t$, even though most of the consideration [up to Eq. (26)] is valid for an arbitrary function. The effect of the perturbation on the system is totally determined by two parameters:[20]

$$Z=\frac{1}{M}{\rm Tr}\hat{V},\quad C_0=\frac{\pi}{M^2\delta_1}{\rm Tr}\hat{V}^2. \tag{6}$$

Parameter Z has a meaning of the average velocity of the energy levels of the dot under the external perturbation and can be omitted from our consideration due to screening (see below). The parameter C_0 characterizes its typical deviation.[21] Since all the physical responses of the system are characterized by the same parameters, the value of C_0 can be eliminated by an independent measurement.

The electron spectrum in the leads near Fermi surface can be linearized,

$$\mathcal{H}_L=\hbar v_{\rm F}\sum_{\alpha,k}k\psi_\alpha^\dagger(k)\psi_\alpha(k), \tag{7}$$

where $\psi_\alpha(k)$ denotes different electron states in the leads, k labels the continuum of momentum states in each channel α, $\hbar v_{\rm F}=1/2\pi\nu$ is the Fermi velocity and ν is the density of states per channel at the Fermi surface. We put $\hbar=1$ in all intermediate formulas below.

The coupling between the dot and the leads is

$$\mathcal{H}_{\rm LD}=\sum_{\alpha,n,k}[W_{n\alpha}\psi_\alpha^\dagger(k)\psi_n+{\rm H.c.}]. \tag{8}$$

For the reflectionless point contacts, the coupling constants, $W_{n\alpha}$, in Eq. (8) are given by:[4,17]

$$W_{n\alpha}=\begin{cases}\sqrt{\dfrac{M\delta_1}{\pi^2\nu}} & \text{if } n=\alpha\leqslant N_{\rm ch}\\ 0 & \text{otherwise.}\end{cases} \tag{9}$$

For open dots with a large number of open channels $N_{\rm ch}\gg 1$ the interaction term can be treated within mean-field approximation, so that the Hamiltonian (3) takes the form

$$\mathcal{H}_{\rm D}^{\rm mf}(t)=\sum_{n,m=1}^{M}\psi_n^\dagger[H_{{\rm D}nm}(t)+eV_d(t)\delta_{nm}]\psi_m, \tag{10a}$$

$$eV_d=2E_c\langle n\rangle_q, \tag{10b}$$

where $\langle n\rangle_q$ stands for the quantum mechanical (but not ensemble) of the number of electrons in the dot. Corrections to mean-field treatment (10a) were calculated in Ref. 18 and shown to be small as $1/N_{\rm ch}^2$.

In the mean-field approximation (10a), one can introduce one-particle scattering matrix $\mathcal{S}_{\alpha\beta}(t_1,t_2)$ as

$$\mathcal{S}_{\alpha\beta}(t,t')=\delta_{\alpha\beta}\delta(t-t')-2\pi i\nu W_{\alpha n}^\dagger G_{nm}^{\rm (R)}(t,t')W_{m\beta}, \tag{11}$$

and the Green functions $\hat{G}^{\rm (R,A)}(t,t')$ are the solutions of

$$\left(i\frac{\partial}{\partial t}-\hat{H}_{\rm D}(t)-eV_{\rm d}(t)\pm i\pi\nu\hat{W}\hat{W}^\dagger\right)\hat{G}^{\rm (R,A)}(t,t')=\delta(t-t'), \tag{12}$$

where the matrices $\hat{H}_{\rm D}$ and $\hat{W}$ are defined by Eqs. (4) and (9).

The dc current through the dot is given by, see Ref. 12:

$$I_{\rm dc}=e\int_0^{T_p}\frac{dt}{T_p}\int dt_1dt_2{\rm Tr}\{\hat{f}(t_1-t_2)[\hat{\mathcal{S}}^\dagger(t_2,t)\hat{\Lambda}\hat{\mathcal{S}}(t,t_1)-\hat{\Lambda}\delta(t_2-t_1)]\}, \tag{13}$$

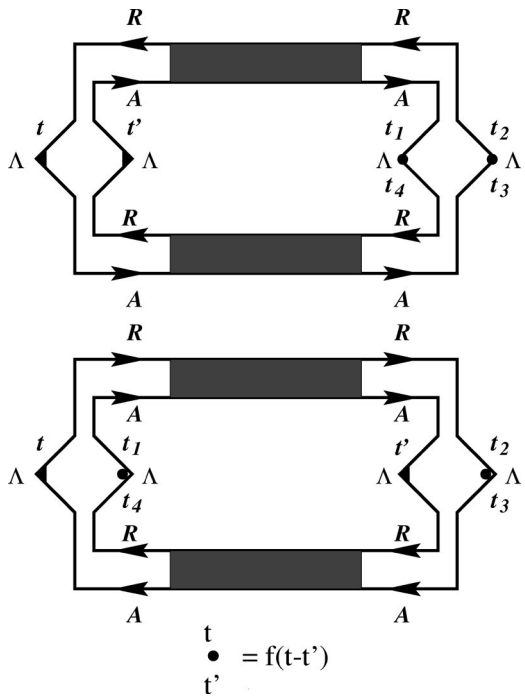

FIG. 2. Two diagrams, which contribute to the conductance correlation function R.

where T_p is the period of the external perturbation, $\hat{f}(t)$ is related to the Fourier transform of the electron-distribution function in the αth channel as

$$f_{\alpha\beta}(t)=\delta_{\alpha\beta}\frac{iTe^{-ieV_\alpha t}}{\sinh \pi T t} \tag{14}$$

and

$$\Lambda_{\alpha\beta}=\delta_{\alpha\beta}\begin{cases}\dfrac{N_r}{N_{\rm ch}} & \text{for } 1\leqslant\alpha\leqslant N_l\\ -\dfrac{N_l}{N_{\rm ch}} & \text{for } N_l+1\leqslant\alpha\leqslant N_{\rm ch}.\end{cases} \tag{15}$$

The spin degeneracy is taken into account in Eq. (13). We assume that the degeneracy is not lifted by magnetic field.

To complete the theory one needs an equation for the averaged number of particles $\langle n\rangle_q$, see Eq. (10b). It is found from the continuity relation as

$$\frac{d\langle n(t)\rangle_q}{dt}=-\int dt_1dt_2\mathrm{Tr}\{\hat{f}(t_1-t_2)\times[\hat{\mathcal{S}}^\dagger(t_2,t)\hat{\mathcal{S}}(t,t_1)-\delta(t_2-t_1)]\}.$$

Equations (13)–(16) are similar to those used in Ref. 22 for studying the frequency dependence of the conductance of mesoscopic system.

ENSEMBLE AVERAGING

Our goal now is to perform calculations of the conductance correlation function

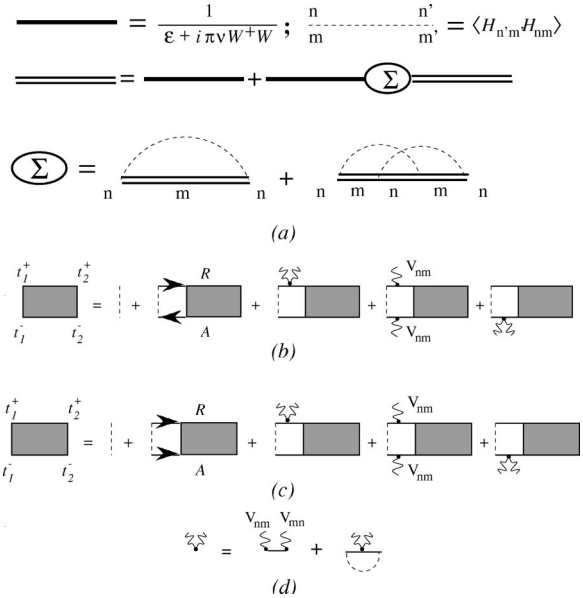

FIG. 3. The elements of the diagrammatic technique.

$$\mathcal{R}(\Phi_1,\Phi_2)=\langle g(\Phi_1)g(\Phi_2)\rangle-\langle g(\Phi_1)\rangle\langle g(\Phi_2)\rangle, \tag{16}$$

using the model outlined above.

We use the leading approximation in small parameter $1/N_{\rm ch}$. The fluctuations of the conductance are smaller than its average value and we can use instead of sample specific Eq. (16) its ensemble-averaged counterpart,

$$\frac{d\langle n(t)\rangle_q}{dt}=-\frac{N_{\rm ch}\delta_l}{2\pi}\langle n(t)\rangle_q+\frac{eN_l}{\pi}[V_l-V_d-Z\varphi(t)]+\frac{eN_r}{\pi}[V_r-V_d-Z\varphi(t)]. \tag{17}$$

Equation (17) is nothing but a discrete form of the diffusion equation for the bulk system and the last two terms correspond to the divergence of the drift current. Substituting Eq. (10b) into Eq. (17), solving the resulting differential equation, we find

$$eV_d(t)+Z\varphi(t)=\frac{4eE_c}{4E_c+\delta_1}\frac{N_lV_l+N_rV_r}{N_{\rm ch}}+Z\frac{\delta_1+(2\pi/N_{\rm ch})\partial_t}{\delta_1+4E_c+(2\pi/N_{\rm ch})\partial_t}\varphi(t). \tag{18}$$

We notice from Eq. (18) that the characteristic energy scale governing charge dynamics is $E_cN_{\rm ch}/2\pi$. Usually, this scale is of the order of the Thouless energy, E_T. Because the random-matrix theory is capable to describe the energy scale smaller than E_T, we can consider only $\omega\ll E_T\simeq E_cN_{\rm ch}/2\pi$. Moreover, for the small quantum dot $E_c\gg\delta_1$, so that Eq. (18) gives

$$V_d=\frac{N_lV_l+N_rV_r}{N_{\rm ch}} \tag{19}$$

and the time-dependent perturbation can be considered as traceless, $Z=0$. This constant electric potential of the dot can be removed from Eq. (12) for the Green function by the following gauge transformation:

$$\hat{G}(t,t')=\hat{G}|_{V_d=0}(t,t')\exp[-ieV_d(t-t')]. \tag{20}$$

Substituting Eq. (20) into Eq. (13) and expanding up to the first power in $V=V_l-V_r$, we find

$$g=\frac{\partial I_{\rm dc}}{\partial V}=g_{\rm cl}+G_0\int_0^{T_{\rm p}}dt\int_{-\infty}^{+\infty}dt_1dt_2F(T(t_1-t_2))\times{\rm Tr}\{\hat{\mathcal{S}}(t,t_1)\hat{\Lambda}\mathcal{S}^{\dagger}(t_2,t)\hat{\Lambda}\}. \tag{21}$$

Here

$$g_{\rm cl}=G_0\frac{N_lN_r}{N_{\rm ch}}$$

is the classical conductance of the dot, $G_0=e^2/\pi\hbar$ is the quantum conductance and $F(x)$ is the Fourier transform of the derivative of electron-distribution function

$$F(x)=\frac{\pi x}{\sinh \pi x}. \tag{22}$$

The correlation function of the conductance (16) is given by the diagrams shown in Fig. 2 and can be found from the following analytical expression:

$$R=2\frac{g_{cl}^2\delta_1^2}{4\pi^2}\int_0^{T_p}\frac{dtdt'}{T_p^2}\int_0^{\infty}d\tau F^2(T\tau)\int_{\tau/2}^{\infty}d\theta\left[\mathcal{D}\left(\frac{t+t'}{2}+\theta,\frac{t+t'}{2}-\frac{\tau}{2},t-t'\right)\mathcal{D}\left(\frac{t+t'}{2}+\theta,\frac{t+t'}{2}+\frac{\tau}{2},t-t'\right)\right.$$
$$\left.+\mathcal{C}\left(t-t'+\theta+\frac{\tau}{2},t-t'-\theta-\frac{\tau}{2},\frac{t+t'}{2}+\frac{\tau}{4}\right)\mathcal{C}\left(t'-t+\theta-\frac{\tau}{2},t'-t-\theta+\frac{\tau}{2},\frac{t+t'}{2}-\frac{\tau}{4}\right)\right]. \tag{23}$$

The diffuson and the Cooperon are defined by the following equations, see Fig. 3:

$$\mathcal{C}(\tau_1,\tau_2,t)=\Theta(\tau_1-\tau_2)\exp\left(-\frac{1}{2}\int_{\tau_2}^{\tau_1}K_c(\tau,t)d\tau\right), \tag{24a}$$

$$\mathcal{D}(t_1,t_2,\tau)=\Theta(t_1-t_2)\exp\left(-\int_{t_2}^{t_1}K_d(\tau,t)dt\right), \tag{24b}$$

where

$$K_{d,c}=\gamma_{d,c}+C_0(\varphi(t+\tau/2)-\varphi(t-\tau/2))^2 \tag{25a}$$

$$\gamma_{d,c}=\frac{\delta_1}{2\pi}(N_{\rm ch}+N_{d,c}), \tag{25b}$$

and parameters $N_{d,c}$ describe the effect of the magnetic field, see Eq. (5).

Derivation of Eq. (23) deserves a little bit of additional discussion. One notices, that the diagrams of Fig. 2 do not contain any piece corresponding to the classical distribution function in the dot. We can trace it into the expression for conductance (21) that contains traceless vertices $\hat{\Lambda}$, which cannot be dressed by the dashed line. On the other hand, any vertex with finite trace corresponds the modified-distribution function of electrons in the dot and represents the effect of heating.[12] Since the distribution function is not dressed in the expression for conductance fluctuations, we conclude, that the effect of heating is not relevant for the conductance fluctuations and the temperature dependence of the conductance fluctuations is uniquely determined by *the electron temperature in the leads*.[15] That means that contrary to the common beliefs, see, e.g., Ref. 7, the amplitude of the mesoscopic fluctuations can*not* be used to study the distribution function of electrons in the dot. From the theoretical side, it is important to emphasize, that the appearance of the traceless vertices is determined solely by the electroneutrality condition (19), any other choice of the dot bias would lead to the change in the photovoltaic current.[12]

IV. LIMITING CASES

Below we consider the limit of high, $\hbar\omega\gg\max(C,\gamma_{d,c})$, and low, $\hbar\omega\ll\gamma_{d,c}$, frequencies. For the high frequencies, $\omega\gg C$, we obtain

$$R=\frac{\delta_1^2g_{cl}^2}{4\pi^2}\left[\frac{1}{\gamma_d^2}Q_d\left(\frac{C_0}{\gamma_d},\frac{T}{\gamma_d}\right)+\frac{1}{\gamma_c^2}Q_c\left(\frac{C_0}{\gamma_c},\frac{T}{\gamma_c},\frac{\hbar\omega}{\gamma_c}\right)\right], \tag{26}$$

where the dimensionless Q functions are given by

$$Q_d(x,y)=\int_0^{\infty}d\tau F^2(y\tau)\int_0^{2\pi}\frac{\exp[-\tau(1+2x\sin^2\zeta/2)]}{1+2x\sin^2\zeta/2}\frac{d\zeta}{2\pi}, \tag{27a}$$

$$Q_c(x,y,z)=\int_0^{\infty}d\tau F^2(y\tau)\times\int_0^{2\pi}\frac{\exp[-\tau(1+2x\sin^2\zeta/2)]}{1+x(\sin^2\zeta/2+\sin^2(\zeta/2+z\tau/2))}\frac{d\zeta}{2\pi}. \tag{27b}$$

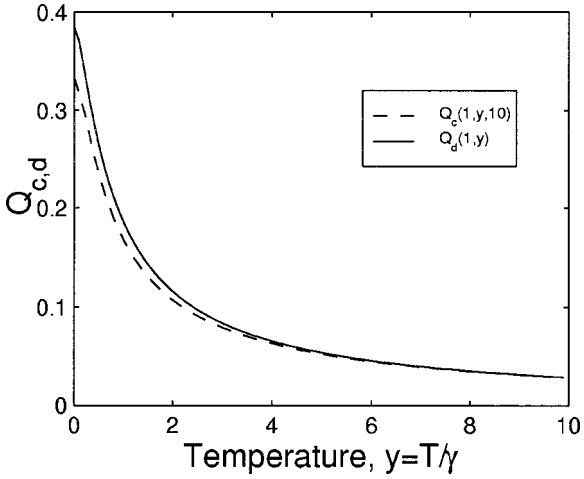

FIG. 4. Functions $Q_c(x,y,z)$ and $Q_d(x,y)$ computed for $x=1$ and $z=10$. As temperature $y=T/\gamma$ increases, function $Q_c(x,y,z)$ approaches frequency independent function $Q_d(x,y)$.

Let us now consider the dependence of the functions $Q_c(x,y,z)$ and $Q_d(x,y)$ from Eqs. (27) on temperature y. For the limit of high temperature, $y \gg 1$, we obtain

$$Q_c(x,y,z) \approx Q_d(x,y) \approx \frac{\pi^2}{3y} \frac{1}{\sqrt{1+2x}}. \tag{28}$$

The equality between functions $Q_c(x,y,z)$ and $Q_d(x,y)$ means the magnetic field symmetry of the conductance.[23] Indeed, using Eqs. (25), (26), and (28) we observe, that

$$R(\Phi_1,\Phi_2) = R(\Phi_1,-\Phi_2). \tag{29}$$

However, in low temperature limit $y \ll 1$, we obtain for $x \gg 1$

$$Q_d(x,0) = \frac{1+x}{(1+2x)^{3/2}} \approx \frac{1}{2\sqrt{2x}}. \tag{30a}$$

$$Q_c(x,0,z) \approx \frac{1}{2x}. \tag{30b}$$

Comparison of Eqs. (26) and (30) reveals an important fingerprint of the dephasing by the external radiation—violation of the Onsager relation

$$\frac{R(\Phi_1,-\Phi_2)}{R(\Phi_1,\Phi_2)} = \sqrt{\frac{2\tilde{\gamma}}{C_0}}, \tag{31}$$

where $\tilde{\gamma} = \gamma_d(\Phi_1,\Phi_2) = \gamma_c(\Phi_1,-\Phi_2)$, provided that $\gamma_c(\Phi_1,\Phi_2) = \gamma_d(\Phi_1,-\Phi_2) \gg \tilde{\gamma}$. This breakdown of the Onsager relation is a simple manifestation of the lifting of the time-reversal symmetry in the system with time-dependent Hamiltonian.

Figure 4 shows $Q_c(x,y,z)$ and $Q_d(x,y)$ as a function of temperature y. At low temperature, $Q_c(x,y,z)$ is smaller than $Q_d(x,y)$ and it approaches $Q_d(x,y)$ as temperature y increases.

In the limit of low frequency $\hbar\omega \ll \gamma_{d,c}$, the contribution from the Cooperon and diffuson parts are described by the same function, so that the conductance correlation function can be represented in the form

$$R = \frac{\delta_1^2 g_{cl}^2}{4\pi^2}\left[\frac{1}{\gamma_d^2} Q\left(\frac{C_0}{\gamma_d},\frac{T}{\gamma_d}\right) + \frac{1}{\gamma_c^2} Q\left(\frac{C_0}{\gamma_c},\frac{T}{\gamma_c}\right)\right], \tag{32}$$

so that the Onsager relation (29) holds. Here

$$Q(x,y) = \int_0^{2\pi} \frac{d\xi d\zeta}{4\pi^2} \int_0^{\infty} F^2(y\tau) \times \frac{\exp[-(1+4x\sin^2\xi/2\sin^2\zeta/2)\tau]}{1+4x\sin^2\xi/2\sin^2\zeta/2} d\tau. \tag{33}$$

This expression in the limit of high temperature $T \gg \gamma_{d,c}$ has an asymptotic behavior

$$Q(x,y) = \frac{\pi}{3y} K(-4x). \tag{34}$$

At zero temperature $Q(x,y)$ is given by the expression

$$Q(x,0) = \frac{1}{\pi} \frac{E(-4x)+(1+4x)K(-4x)}{1+4x}, \tag{35}$$

where $K(x)$ and $E(x)$ are the elliptic integrals of the first and second kind, respectively,

$$K(x) = \int_0^{\pi/2} \frac{d\varphi}{\sqrt{1-x\sin^2\varphi}},$$

$$E(x) = \int_0^{\pi/2} \sqrt{1-x\sin^2\varphi}\, d\varphi.$$

We conclude that the conductance fluctuations are suppressed by external radiation even in the limit of the low frequency, see Eq. (32). Indeed, during one period of time, the system goes along a closed loop in the parameter space and the contribution to the dc conductance is effectively determined by the equilibrium conductance, correspondent to each point of the loop. The equilibrium conductance fluctuates along this loop. Thus, the observed dc conductance is already partially averaged over some realizations of the quantum dot and its fluctuations decrease. The perturbation strength is related to the length of the contour in the parameter space and effectively determines how many different dot's configurations contribute to the dc conductance. Consequently, the stronger perturbation, over the larger number of the realizations the dc conductance is averaged and the smaller fluctuations of the dc conductance.

This should be contrasted with the suppression of the averaged magnetoresistance.[8,10] There, the stationary field does not do anything because the result is already ensemble averaged. In order to suppress the average quantum correction, the field should change on the time scale of the order of $1/\gamma_{\rm esc}$, where $\gamma_{\rm esc} = \delta_1 N_{\rm ch}/2\pi$ is the escape rate from the dot. That is why the effect of the low-frequency radiation on

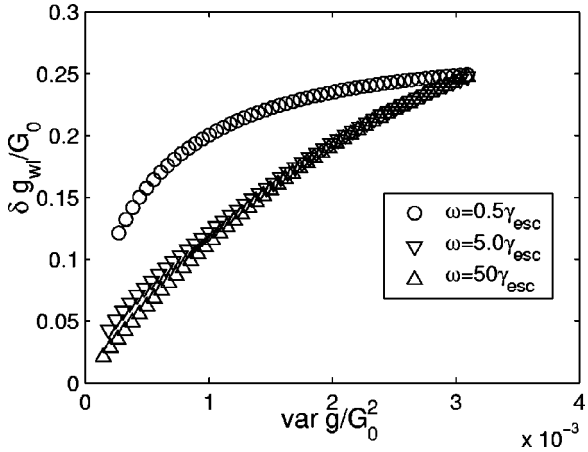

FIG. 5. Weak localization correction $\delta g_{\rm wl}$ vs conductance fluctuations var g of an open quantum dot with $N_l = N_r \gg 1$ for three values of frequency ω: $\hbar\omega = 0.5\gamma_{\rm esc}$ (o); $\hbar\omega = 5\gamma_{\rm esc}$ (∇); $\hbar\omega = 50\gamma_{\rm esc}$ ($\triangle$). The temperature for all lines was taken $T = 10\gamma_{\rm esc}$. The amplitude of the field C_0 varies from $10^{-2}\gamma_{\rm esc}$ to $10^{2}\gamma_{\rm esc}$. $G_0 = e^2/\pi\hbar$ is the quantum conductance.

conductance fluctuations and weak localization corrections are significantly different. At high frequency $\hbar\omega \gg \gamma_{\rm esc}$ the dc conductance no longer can be represented in terms of the stationary conductance and the suppression of both the conductance fluctuations and the weak localization correction to the conductivity can be interpreted as dephasing.

COMPARISON WITH EXPERIMENT

Our results still contain an unknown parameter C_0 characterizing the strength of the perturbation. There is a way, however, to present the results in a form not depending on this parameter, thus eliminating a need for additional fitting. Following Ref. 7, we represent the parametric dependence of the weak localization correction $\delta g_{\rm wl}$ vs var g, where $\delta g_{\rm wl}$ is given by:[10]

$$\delta g_{\rm wl} = -\frac{e^2}{\pi\hbar}\frac{N_l N_r}{(N_l+N_r)^2} P\left(\frac{C_0}{\gamma_{\rm esc}}, \frac{\hbar\omega}{\gamma_{\rm esc}}\right), \tag{36}$$

$$P(x,z) = \int_0^\infty e^{-\xi - x\phi} I_0[x\phi] d\xi, \phi = \xi - \frac{\sin z\xi}{z}. \tag{37}$$

The conductance variance is determined from Eq. (23) for broken time-reversal symmetry $\gamma_c \to \infty$. Figure 5 shows the parametric dependence for various values of the parameters C_0 and ω and $T = 10\gamma_{\rm esc}$.

We observe that the shape of the curves depends on the frequency of external radiation. Particularly, in the limit of low frequency $\hbar\omega \ll \gamma_{\rm esp}$ the weak localization correction is not changed by the radiation, while the conductance fluctuations may be significantly suppressed. At high frequency, $\hbar\omega \gg C_0$, $\gamma_{\rm esc}$ the curves become nonsensitive to the radiation frequency.

The authors of Ref. 7 found that the radiation applied to their device produced curves in var$g$ vs $\delta g_{\rm wl}$ plane identical to the curve produced by increasing temperature of the device for a wide range of frequencies. This observation apparently demonstrates that the radiation produces the heating of electrons and the effect of dephasing without heating, see Ref. 24, is not observed in experiments.[7] It was also suggested that the main mechanism is the increase of the temperature in the dot due to the Joule heat by induced ac source-drain bias.

Although the present data of Ref. 7 support the heating mechanism of suppression of the weak localization correction to the conductance and the conductance fluctuations, we believe that more detailed analysis has to be done. According to our theory, see Eq. (21) and the paragraph below Eq. (25b), (i) mesoscopic fluctuations are sensitive only to the temperature in the leads, and therefore, the notion of heating of electrons in the dot responsible for $1/T$ dependence of the mesoscopic fluctuations is not relevant: if there is a heating, it manifests itself only through *the temperature of the leads*; (ii) high-frequency curves of our theoretical Fig. 5 quantitatively agree with data on Fig. 3 of Ref. 7, for frequencies $f = 1$, 10, and 25 GHz. An exception is the lowest-frequency curve ($f = 100$ MHz) represented in this plot, for the dot with $\delta_1 = 2.4\mu$eV, $N_{\rm ch} = 2$ corresponds to $hf/\gamma_{esc} \approx 0.5$, so according to our Fig. 5 it should have observable deviations from the high-frequency curves, which is not seen. However, taking into account uncertainty in determination of the level spacing δ_1 from the geometrical area of the dot, this does not unambiguously rule out the microwave dephasing mechanism.

We believe that the ''smoking gun'' evidence for the mechanism considered in the present paper is the violation of the Onsager relation (31) in high-frequency regime, $\hbar\omega \gg \gamma_{c,d}$, T. The dependence of this violation on the amplitude of the field C_0 is the main prediction of the theory.

SUMMARY

We constructed the time-dependent random-matrix theory to describe the effect of the nonequilibrium external radiation on conductance fluctuations of an open quantum dot. The main experimental feature to reveal such a mechanism is the breakdown of the magnetic symmetry of the conductance by high-frequency radiation, $\hbar\omega \gg T$, see Eq. (31).

ACKNOWLEDGMENTS

We thank V. Ambegaokar, P. W. Brouwer, V. E. Kravtsov, and C. M. Marcus for useful discussions. This work was supported by the NSF under Grant No. DMR 0086509 (M.G.V.) and by Packard Foundation (I.L.A.).

[1] B.L. Altshuler, Pis'ma Zh. Éksp. Teor. Fiz. **51**, 530 (1985) [JETP Lett. **41**, 648 (1985)].
[2] P.A. Lee and A.D. Stone, Phys. Rev. Lett. **55**, 1622 (1985).
[3] B.L. Altshuler and B.I. Shklovskii, Zh. Éksp. Teor. Fiz. **91**, 220 (1986) [Sov. Phys. JETP **64**, 127 (1986)].
[4] C.W.J. Beenakker, Rev. Mod. Phys. **69**, 731 (1997).
[5] B.L. Altshuler and D.E. Khmelnitskii, Pis'ma Zh. Éksp. Teor. Fiz. **42**, 291 (1985) [JETP Lett. **42**, 359 (1985)]. Also see P.A. Lee, Fukuyama, and A.D Stone, Phys. Rev. B **35**, 1039 (1985).
[6] A.G. Huibers, M. Switkes, C.M. Marcus, K. Campman, and A.C. Gossard, Phys. Rev. Lett. **81**, 200 (1998).
[7] A.G. Huibers, J.A. Folk, S.R. Patel, C.M. Marcus, C.I. Duruöz, and J.S. Harris, Phys. Rev. Lett. **83**, 5090 (1999).
[8] B. L. Altshuler *et al.*, *Quantum Theory of Solids* (Mir, Moscow, 1982).
[9] H.U. Baranger, P.A. Mello, Phys. Rev. B **51**, 4703 (1995); P.W. Brouwer and C.W.J. Beenakker, *ibid.* **51**, 7739 (1995); **55**, 4695 (1997); I.L. Aleiner and A.I. Larkin, *ibid.* **54**, 14 423 (1996); E. McCann and I.V. Lerner, *ibid.* **57**, 7219 (1998).
[10] M.G. Vavilov and I.L. Aleiner, Phys. Rev. B **60**, R16 311 (1999).
[11] V.I. Belinicher and B.I. Sturman, Usp. Fiz. Nauk **130**, 415 (1980) [Sov. Phys. Usp. **23**, 199 (1980)]; V.I. Fal'ko and D.E. Khmelnitskii, Zh. Éksp. Teor. Fiz. **95**, 328 (1989) [Sov. Phys. JETP **68**, 186 (1989)]; V. Falko, Europhys. Lett. **8**, 785 (1989); A.G. Aronov and V.E. Kravtsov, Phys. Rev. B **47**, 13 409 (1993); V.E. Kravtsov and V.I. Yudson, Phys. Rev. Lett. **70**, 210 (1993).
[12] M.G. Vavilov, V. Ambegaokar, and I.L. Aleiner, Phys. Rev. B **63**, 195 313 (2001).
[13] M. Switkes, Ph.D. thesis, Stanford University, 1999.
[14] P.W. Brouwer, Phys. Rev. B **63**, 121303 (2001).
[15] The same conclusion for the conductance fluctuations of open quantum dots was reached by V.I. Yudson, E. Kanzieper, and V.E. Kravtsov, Phys. Rev. B **64**, 045310 (2001). We find the reasoning of this paper imprecise, since the electroneutrality condition is not invoked there. Nevertheless, the answer is correct.
[16] X.B. Wang and V.E. Kravtsov, Phys. Rev. B **64**, 033313 (2001).
[17] I.L. Aleiner, P.W. Brouwer, and L.I. Glazman, cond-mat/0103008 (unpublished).
[18] P.W. Brouwer and I.L. Aleiner, Phys. Rev. Lett. **82**, 390 (1999).
[19] A. A. Abrikosov, L. P. Gorkov, and I. E. Dzyaloshinskii, *Methods of Quantum Field Theory in Statistical Physics* (Prentice-Hall, Englewood Cliffs, NJ, 1963).
[20] Note that C_0 is defined in Ref. 10 with a different numerical factor.
[21] B.D. Simons and B.L. Altshuler, Phys. Rev. Lett. **70**, 4063 (1993); B. L. Altshuler and B. D. Simons, in *Mesoscopic Quantum Physics*, edited by E. Akkermans *et al.* (Elsevier, New York, 1995).
[22] M. Büttikker, H. Thomas, and A. Pretre, Z. Phys. B: Condens. Matter **94**, 133 (1994).
[23] L. Onsager, Phys. Rev. **38**, 2265 (1931); M. Büttikker, Phys. Rev. Lett. **57**, 1761 (1986).
[24] B.L. Altshuler, M.E. Gershenzon, and I.L. Aleiner, Physica E (Amsterdam) **3**, 58 (1999).